ADM Aspida

User Manual

Commercial in Confidence

UK Office
15 Ellerbeck Court,
Stokesley Business Park,
North Yorkshire, TS9 5PT, UK

US Office
15121 Graham Street #B106,
Huntington Beach, California,
92649

UK / Global
info@analoxgroup.com
+44 (0)1642 711 400

US Office
ussales@analox.biz
(714) 891 4478
Toll Free: (877) 723 3247

analoxgroup.com

Emergency Contact: UK / Global 0800 211 8160 **US** (855) 711 4994

List of Contents

1 Safety information 5
2 Package contents checklist 6
3 Overview 7
3.1 ADM Aspida main features 8
4 Installation 9
4.1 Fitting the oxygen sensor 9
4.2 Installation of the ADM Aspida (Using faceplate kit) 13
4.3 Gaining access to the ADM Aspida (When faceplate is fitted) 15
5 Charging the ADM Aspida 17
6 Operation 19
6.1 Button functions 19
6.2 Switching the device on/off 19
6.3 User registration 20
6.4 The main display 20
6.5 Screen saver 21
6.6 Battery status 21
6.7 Menus 22
6.8 Common menu items 22
6.9 Gas alarms 23
6.10 Global alarm options 24
6.11 Alarm set-points 24
6.12 Alarm latching 26
6.13 Alarm muting 26
6.14 Quiet alarms 26
6.15 Data logging 27
6.16 Panic alarm 27
6.17 Time-weighted average (TWA) monitoring of carbon dioxide 28
6.18 Maintenance reminders 29
6.19 Calibration reminders 29
6.20 Sensor replacement reminders 30
6.21 Faults 30
6.22 Troubleshooting 31
7 Maintenance 32
7.1 Spares & accessories 32
7.2 Calibration 33
7.3 Sensor calibration 33
7.4 CO_2 sensor replacement 37
7.5 Oxygen sensor replacement 37
7.6 Cleaning 45
8 Specifications 46
9 Warranty information 48
10 Disposal 49
10.1 WEEE statement 49
10.2 Oxygen sensor disposal 49
11 UK Declaration of Conformity 50
12 Declaration of conformity 51

Copyright © 2020 Analox Ltd. All Rights Reserved.

Commercial in Confidence

Copyright © 2020 Analox Ltd. All Rights Reserved.

Commercial in Confidence

1 Safety information

WARNING: READ THE SAFETY INFORMATION FULLY BEFORE USING THE ADM ASPIDA.

WARNING: DO NOT ATTEMPT TO CHARGE THE BATTERIES WHILE THE DEVICE IS INSIDE THE HYPERBARIC CHAMBER.

High volume audible alarm

The ADM Aspida employs high volume warning alarms with a sound pressure level at 1m of 95dB in the case of normal gas alarms.

Electrochemical oxygen sensor

The oxygen sensor used in the ADM Aspida is an electrochemical sensor which contains potassium hydroxide. Under normal conditions the sensor is sealed. To prevent leakage, the unit must not be exposed to temperatures outside the specified range, or be exposed to organic vapours, which may cause physical damage to the body of the sensor. The unit must not be stored in areas containing organic solvents or in flammable liquid stores.

Copyright © 2020 Analox Ltd. All Rights Reserved.

Commercial in Confidence

2 Package contents checklist

ADM Aspida (Single & Dual)

a) ADM Aspida main unit
b) Oxygen sensor (Not shown)
c) Oxygen sensor insertion/extraction tool (Not shown)
d) Universal charger/power supply (Including adaptors)
e) Calibration adaptor (Including 300mm of tubing, single or dual)
f) USB communication cable (Not shown)
g) Test Certificate
h) Quick Start Guide

Single variant

Dual variant

Copyright © 2020 Analox Ltd. All Rights Reserved.

Commercial in Confidence

3 Overview

The ADM Aspida is a purpose designed compact portable gas monitor capable of continuous monitoring of both carbon dioxide (CO_2) and oxygen (O_2).

The ADM Aspida gives clear audible and visible warning of potentially dangerous gas levels. A high-resolution Organic Light-Emitting Diode (OLED) display shows clear, live gas levels in all light conditions.

The ADM Aspida is housed in a robust, IP65 splash proof enclosure. The instrument operates using rechargeable battery technology, allowing it to run for more than 12 hours continuously between charges. An ADM Aspida allows for easy replacement of the rechargeable batteries with standard, AA type non-rechargeable batteries in circumstances where recharging is not possible.

The ADM Aspida offers continuous monitoring of O_2, CO_2 or dual gas. The ADM Aspida can be retrofitted with a faceplate allowing for panel mounting, see section 7.1 for the faceplate kit part number.

Table 1 ADM Aspida factory default settings

Parameter	Setting	
O_2 Alarms	%Vol Version	
	18% 19.5% 23%	
CO_2 Alarms	%Vol Version	
	0.5% 1.5% 4%	
Alarm Latch State	Non-latching	
Alarm Muting State	Mutable	
Man-down State	Disabled	
Logging Rate	30 seconds	

Copyright © 2020 Analox Ltd. All Rights Reserved.

Commercial in Confidence

3.1 ADM Aspida main features

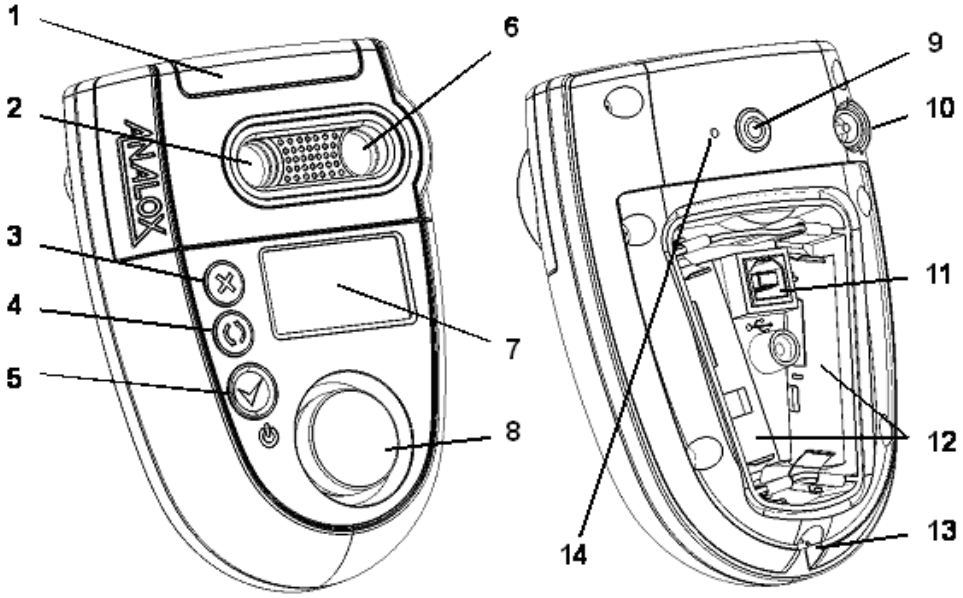

Figure 1 Main features

1) Alarm, fault and OK indicators
2) Carbon dioxide gas port
3) Cancel/exit/panic-alarm button
4) Cycle button
5) Confirm/on/off button
6) Oxygen gas port (if sensor fitted)
7) OLED display
8) Horn
9) Belt loop mount point
10) Charger socket
11) USB communication socket
12) Battery compartments
13) Lanyard pin
14) Breather (pressure equalisation) hole – do not cover

Copyright © 2020 Analox Ltd. All Rights Reserved.

Commercial in Confidence

4 Installation

4.1 Fitting the oxygen sensor

1] Remove the top 4 screws from the device using a cross-head screwdriver as shown in Figure **2**. Retain the screws along with the sealing washers.

Figure 2 ***Remove the sensor cap screws***

2] Gently remove the sensor cap as shown in Figure **3**.

Figure 3 ***Remove the sensor cap***

WARNING: DO NOT TOUCH THE INSIDE OF THE (INSTRUMENT OTHER THAN AS NOTED IN THESE INSTRUCTIONS) WITHOUT APPROPRIATE ANTI-STATIC PRECAUTIONS.

Copyright © 2020 Analox Ltd. All Rights Reserved.

Commercial in Confidence

3] Remove the new sensor from its packaging. Oxygen sensors are supplied in sealed bags. Before the bag is opened check that the sensor has not leaked – if it has, then please refer to the safety information at the start of this section.

Figure 4 Insert the new sensor into the extraction tool

4] Insert the new sensor as show in Figure **5**, ensuring that the two pins of the new sensor are away from, but align with the extraction tool alignment rib, as shown.

Figure 5 Align the new sensor in the extraction tool

5] Align the extraction tool rib with the ADM Aspida case alignment mark as shown in Figure **6**.

Figure 6 Align the new sensor with the ADM Aspida device

6] Push the tool and sensor gently downwards into the case until the sensor locates firmly within its socket.

Copyright © 2020 Analox Ltd. All Rights Reserved.

Commercial in Confidence

7] Hold the top ring of the extraction tool gently, without squeezing the grip (Figure **7**) and lift the tool vertically upwards to remove the extraction tool whilst leaving the new sensor in place. (A gentle twisting of the tool may help to separate the tool from the sensor).

Figure 7 Remove the extraction tool

8] Replace the sensor cap ensuring that the oxygen cell is centrally sited in the gas port with the white gasket visible around the whole of the gas port. If misaligned, remove the sensor cap, and adjust the oxygen cell position using the extraction tool. Then refit the cap and recheck the alignment.

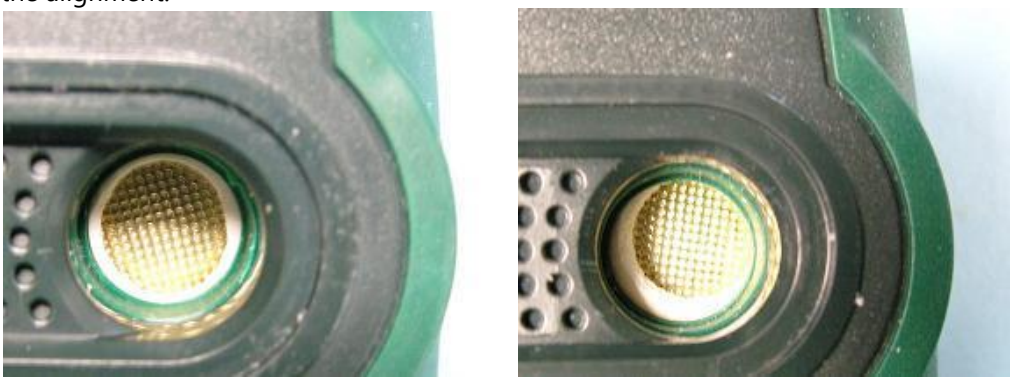

Figure 8 Centralised and misaligned sensors

Copyright © 2020 Analox Ltd. All Rights Reserved.

Commercial in Confidence

9] Holding the sensor cap in position, turn the unit over and fit the 4 crosshead screws (including washers) into the rear of the case as shown in. Figure **9**.

Figure 9 ***Replace the sensor cap and secure the screws***

WARNING: **ANY NEW SENSOR FITTED TO A DEVICE WILL TAKE TIME TO SETTLE TO A STABLE READING. FOR THIS REASON, ONCE THE SENSOR HAS BEEN FITTED, THE DEVICE SHOULD BE LEFT UN-POWERED FOR AT LEAST 2 HOURS BEFORE ATTEMPTING TO POWER-UP AND CALIBRATE.**

10] Once the sensor has been allowed to settle, replace the batteries and fit the battery cover.

11] Power the device and allow the sensor(s) to warm up. The new oxygen sensor will require calibration and may be showing a fault due to an over-range reading (this is possible for a new sensor). To calibrate the oxygen sensor, follow the instructions in the section 0.

NOTE: **THE OXYGEN SENSOR MAY REQUIRE FURTHER FRESH AIR CALIBRATIONS AS THE SENSOR CONTINUES TO SETTLE. THE OXYGEN READING SHOULD BE CHECKED FREQUENTLY IN FRESH AIR DURING THE FIRST FEW HOURS OF OPERATION WITH A NEW OXYGEN SENSOR.**

To ensure the sensor replacement reminder (⇆ icon) occurs at the correct time for the new sensor, the reminder should be reset using the ADM Aspida configuration software. See the Aspida software configuration manual for instructions.

Copyright © 2020 Analox Ltd. All Rights Reserved.

Commercial in Confidence

4.2 Installation of the ADM Aspida (Using faceplate kit)

The ADM Aspida will come with the battery cover secured to the main unit.

An optional ADM Aspida faceplate kit is available to purchase separately from Analox, see section 7.1 for details.

Details on how to fit the faceplate are provided with the kit.

If using the faceplate kit, the cut-out required for the ADM Aspida with faceplate is shown below.

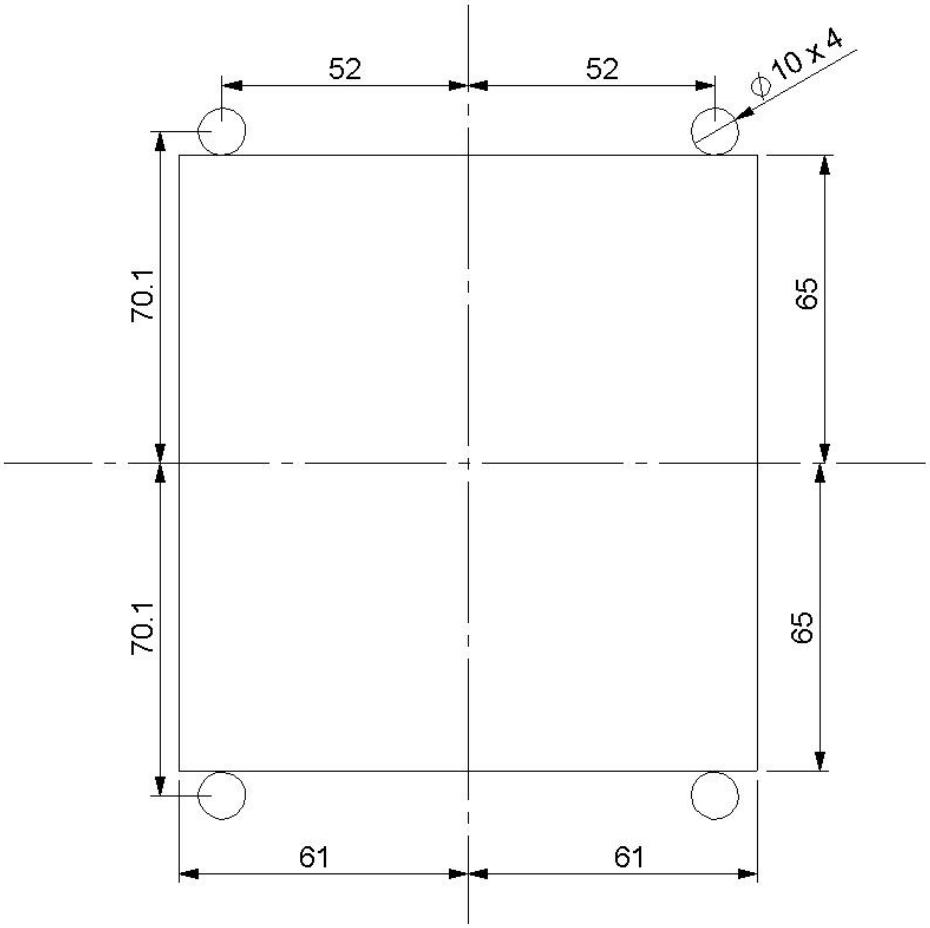

Optional fixing kits are available from Analox, see spares and accessories list at section 7.1

To install the ADM Aspida into your panel, place the captive nuts from the fixing kit through each of the 10mm diameter holes in the panel, then while securing the captive nuts screw in the M5 x 25mm Pozi Pan screws from the fixing kit until the captive nut comes back on itself.

Fit the flow adaptor and feed the pipe through the 6.5mm hole in the front panel and connect the free end of the 6mmOD x 4mmID pipework to the supply gas line using a suitable 6mmOD pneumatic connector.

Copyright © 2020 Analox Ltd. All Rights Reserved.

Commercial in Confidence

Ensure the supplied 9V PSU's DC jack is connected to the rear of the unit.

Remove the screws and align the ADM Aspida front panel mounting holes up with the captive nuts, then re-insert the M5 x 25mm Pozi Pan screws through and tighten.

The illustrations below show the installation of the ADM with the pipework installation.

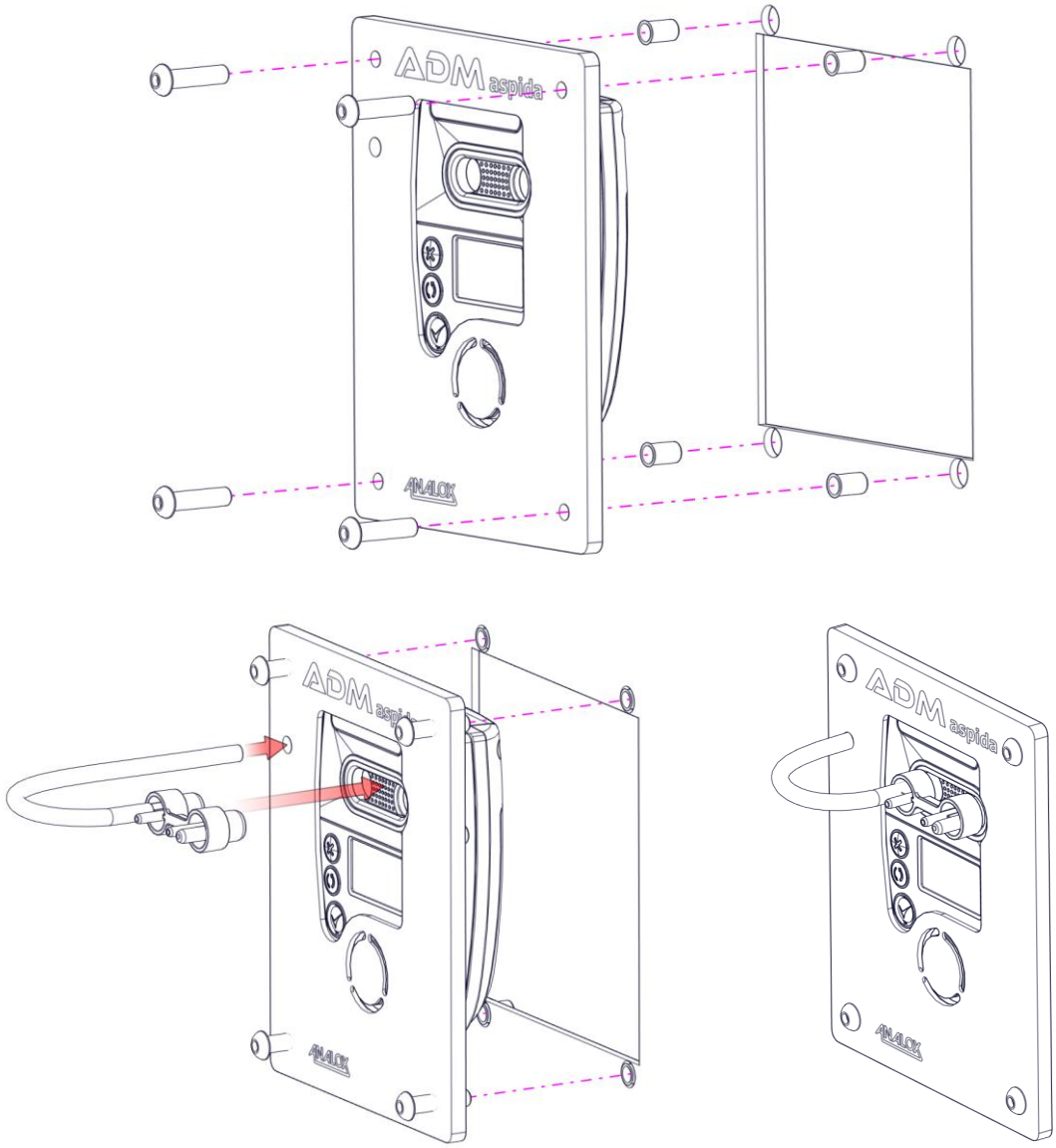

Copyright © 2020 Analox Ltd. All Rights Reserved.

Commercial in Confidence

4.3 Gaining access to the ADM Aspida (When faceplate is fitted)

To gain access to the ADM Aspida for either USB connection or sensor change the following steps should be followed.

Firstly, remove the ADM Aspida from the instrument panel by removing the four M5 x 25mm Pozi Pan screws.

Turning the ADM Aspida over, remove the two left most screws and washers from the tie bases.

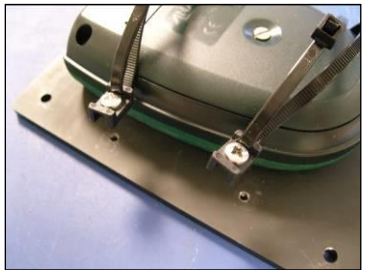

You should now be able to remove the ADM Aspida main unit from the panel and be able to remove the battery cover as described in section 0Battery installation.

The ADM Aspida is powered by a universal mains adaptor, 90-264VAC to 9VDC, with a 2.1mm x 5.5mm x 12mm DC jack plug – centre pin positive. Battery backup is available as an optional extra, this can be supplied by Analox, see spares and accessories list at section 7.1

Copyright © 2020 Analox Ltd. All Rights Reserved.

Commercial in Confidence

To gain access to the battery compartment, undo the screw in the centre of the battery cover on the rear of the device and lift the cover off. Before removing batteries from the device, ensure that it is switched off and that the mains charger and USB cable are disconnected.

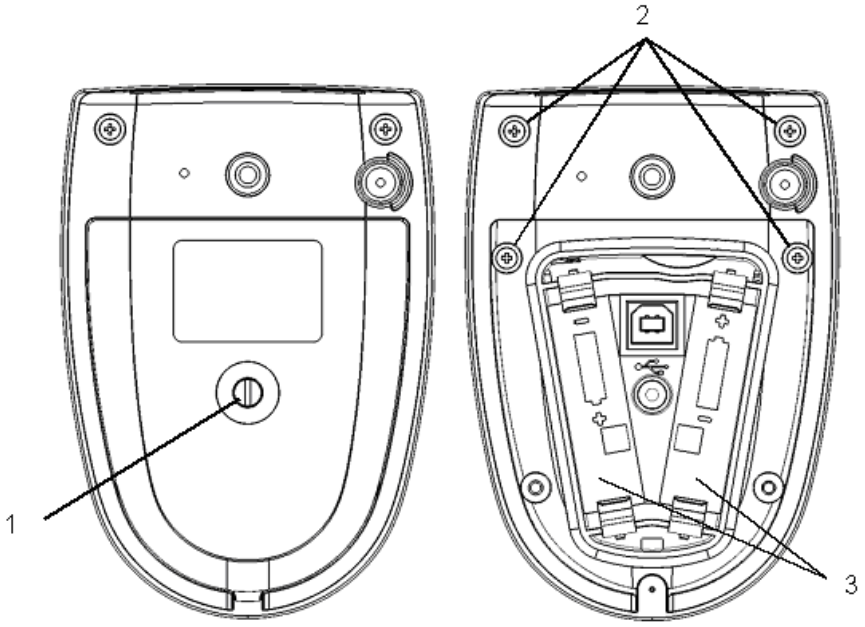

Figure 10 Battery compartment

1) Battery compartment access screw
2) Sensor compartment access screws
3) Battery compartments

WARNING: CARE SHOULD BE TAKEN WHEN INSERTING BATTERIES, PAYING PARTICULAR ATTENTION TO THE ORIENTATION OF EACH BATTERY. MARKINGS ON THE INSIDE OF THE BATTERY COMPARTMENT INDICATE THE CORRECT BATTERY ORIENTATION. INCORRECT ORIENTATION OF THE BATTERIES MAY RESULT IN DAMAGE TO THE DEVICE. BATTERIES SHOULD BE INSERTED BY HAND WITHOUT USE OF TOOLS USING REASONABLE FORCE ONLY.

Copyright © 2020 Analox Ltd. All Rights Reserved.

Commercial in Confidence

5 Charging the ADM Aspida

WARNING: **THE FOLLOWING SAFETY WARNINGS SHOULD BE OBSERVED BEFORE ATTEMPTING TO CHARGE THE ADM ASPIDA:**

THE ADM ASPIDA SHOULD ONLY BE CHARGED WHEN THE NIMH BATTERIES SUPPLIED WITH THE PRODUCT ARE FITTED. ATTEMPTING TO RECHARGE NON-RECHARGEABLE ALKALINE BATTERIES WILL IN MOST CASES RESULT IN AN ABORTED CHARGE, AND THIS WILL BE INDICATED BY A FLASHING ICON ON THE DISPLAY. HOWEVER, CONNECTING THE MAINS CHARGER WHILST USING ALKALINE BATTERIES IS NOT RECOMMENDED AND MAY RESULT IN DAMAGE TO THE DEVICE.

THE ADM ASPIDA MAY BE USED WITH STANDARD RECHARGEABLE AA TYPE BATTERIES WHICH HAVE BEEN CHARGED USING A THIRD-PARTY CHARGING DEVICE. HOWEVER, ONLY NIMH BATTERIES PROVIDED BY ANALOX SHOULD BE USED WHEN ATTEMPTING TO CHARGE BATTERIES WITHIN THE DEVICE USING THE MAINS CHARGER.

DO NOT ATTEMPT TO CHARGE THE DEVICE USING A MAINS CHARGER OTHER THAN THE ONE SUPPLIED WITH THE DEVICE. USE OF AN INCORRECT MAINS CHARGER MAY DAMAGE THE DEVICE AND INVALIDATE THE WARRANTY.

THE BATTERY COVER SHOULD ALWAYS BE SECURELY FITTED BEFORE PERFORMING A CHARGE.

- With the mains charger disconnected from the wall outlet, insert the power jack into the socket on the rear of the ADM Aspida device.
- Insert the mains charger into the wall outlet.
- Switch on the mains at the wall outlet.

NOTE: **THE UNIT CAN BE CHARGED WHILST SWITCHED ON OR SWITCHED OFF.**

Copyright © 2020 Analox Ltd. All Rights Reserved.

Commercial in Confidence

The following lists the conditions that may be observed during a charge.

Battery icon state	Audible warning	Charge status
>> (animated)	None	Charging (charge setup)
>> >> (animated)	None	Charging
>> (animated)	None	Charging (Approx. 1.5 hours remain)
	Success beep	Charge complete
(flashing)	Fault beep	Charge fault Batteries not rechargeable
	Fault beep	No batteries

The normal charge period for a set of fully discharged batteries is approximately 4.5 hours.

NOTE: **DURING CHARGING, THE DEVICE WILL WARM UP. THIS EFFECT IS NORMAL. IT IS HOWEVER SUGGESTED THAT THE DEVICE IS CHARGED INDOORS AT ROOM TEMPERATURE TO ENSURE A FULL CHARGE CYCLE COMPLETES.**

Copyright © 2020 Analox Ltd. All Rights Reserved.

Commercial in Confidence

6 Operation

6.1 Button functions

The ADM Aspida has three buttons that are used as follows:

Button	Function
	• Power on/off • Confirm • Select button
	• Show device menu • Cycle through options
	• Cancel • Return to main screen

6.2 Switching the device on/off

To switch the ADM Aspida on, press the button.

After a few seconds, the main gas display screen will be shown. If multiple usernames are registered to the device, then the username selection screen will be shown instead. See the section 'User registration' for further instructions.

On start-up, the sensors have a short warm-up period. Live gas values will not be displayed until the sensors have completed their warm-up. Typically, for oxygen, the warm-up takes 15 seconds and for carbon dioxide, the warm-up takes 30 seconds. Sensor warm-up will be shown on the display.

To switch off the device, from the main display press and hold the button until the screen goes blank then release the button.

To return to the main display from the menu system, press and release the button as required to exit the menus.

NOTE: **THE DEVICE CANNOT BE TURNED OFF WHEN POWERED FROM USB.**

Copyright © 2020 Analox Ltd. All Rights Reserved.

Commercial in Confidence

6.3 User registration

The ADM Aspida allows for registration of up to two usernames. This allows users to share use of the device. On start-up, a username is selected, and all subsequent gas information is logged internally against the selected user ID. Users can be registered to a device using the ADM Aspida configuration software. See the ADM Aspida configuration software manual for instructions.

On device power up, if a single user is registered, the username will be displayed for a few seconds, after which the device will operate normally.

If 2 users are registered, both usernames will be displayed in a menu for the user to select. Pressing the button will cycle between highlighted usernames. The button will select the highlighted user.

NOTE: **IF A USER IS NOT SELECTED WITHIN 2 MINUTES OF START-UP, A 'NO USER' ID WILL BE SELECTED AUTOMATICALLY AND THE DEVICE WILL PROCEED TO RUN NORMALLY. DURING THESE TWO MINUTES, A REMINDER BEEP WILL BE SOUNDED TO PROMPT THE USER TO SELECT AN ID.**

6.4 The main display

Under normal operation, gas values for each of the sensors fitted are shown in their own window along with the description of the gas type and measurement units. The current gas value for each sensor will be updated on the display once per second.

Figure 11 ***Dual sensor display (left), single sensor display (right)***

1) Man-down detection enabled icon
2) Clock
3) Measured gas types (dual sensor)
4) Measured gas values (dual sensor)
5) Measured gas units (dual sensor)
6) Quiet mode enabled icon
7) Atmospheric pressure (mbar)
8) Battery status icon
9) Measured gas type (single sensor)
10) Measured gas value (single sensor)
11) Measured gas units (single sensor)

NOTE: **THE ADM ASPIDA DOES NOT INCLUDE A PRESSURE SENSOR, IT HAS A FIXED ATMOSPHERIC PRESSURE READING OF 1000 MBAR. THIS VALUE IS DISPLAYED AS ABOVE BUT WILL REMAIN AT 1000 MBAR.**

Copyright © 2020 Analox Ltd. All Rights Reserved.

Commercial in Confidence

6.5 Screen saver

The screen saver function is intended to extend the battery life of an ADM Aspida and reduce screen burn-in. If the user does not operate any buttons for one minute then the screen saver, when enabled, will automatically dim the display.

Pressing any button will wake the device from screen saver mode.

If the device is connected to the charger or connected to a PC via USB, the screensaver will not be shown, but the display will still dim as normal.

During screen saver mode, gas values are still monitored as normal. Any gas alarm will wake the display from screen saver immediately and the main gas display will be shown.

It is possible to enable/disable the screen saver option via the supplied PC software.

6.6 Battery status

The battery status icon is shown in the top right-hand corner of the display. This icon gives a representative indication of the power remaining in the batteries. As the batteries run down from full to empty, the battery icon will be displayed in various states.

Icon	Battery status
,	Battery sufficiently charged
	Battery low
(flashing)	Battery nearly empty. Approx. 1 hour of operation remaining. A reminder beep will sound periodically.
	The device is powered from the mains charger. The icon will be shown next to the battery icon.
	The device is attached to and powered by a computer via a USB cable. The USB symbol will be shown instead of the battery icon (in addition to, if charging).

NOTE: **DUE TO THE NATURE OF THE BATTERY TYPE, THE BATTERY STATUS ICON MAY TEMPORARILY INDICATE A CAPACITY HIGHER THAN THE TRUE REMAINING BATTERY CAPACITY UPON SWITCH-ON. THIS EFFECT IS USUALLY SEEN IN DEVICES WHICH HAVE BEEN SWITCHED OFF FOR AN EXTENDED PERIOD OF TIME. THE TRUE BATTERY STATUS WILL BE INDICATED WITHIN A FEW MINUTES OF POWER-UP.**

Copyright © 2020 Analox Ltd. All Rights Reserved.

Commercial in Confidence

6.7 Menus

1] The device main menu can be accessed by pressing the button. This will display a menu screen like the one shown below.

Figure 12 Typical menu

NOTE: THE MENU ICONS DISPLAYED WILL VARY DEPENDING ON THE CONFIGURATION OF THE DEVICE AND THE SENSOR FITTED.

2] Press to cycle through the menu options and highlight the chosen option. If an arrow is present at either end of the menu, it indicates that there are more options beyond the edges of the visible menu. Advancing the menu cursor past the end of the visible menu will reveal the extra menu items.

3] Pressing the button when the chosen option is highlighted will select that option.

4] Pressing at any time whilst the menu is shown will return to the main gas display.

6.8 Common menu items

Menu Icon	Function
ⓘ	**Information** – Selecting this menu item will display a screen with information related to the specific device, such as serial number and firmware version.
↵	**Back** – Selecting back exits the menu and returns to the main gas display.
CAL CO_2	**Carbon dioxide calibration** – (carbon dioxide configurations only) Select this option to perform a calibration of the carbon dioxide sensor. This feature is described in further detail in the section 0.
CAL O_2	**Oxygen calibration** – (oxygen configurations only) Select this option to perform a calibration of the oxygen sensor. This feature is described in further detail in the section 0.
CO_2	**Carbon dioxide sensor information** – (carbon dioxide configurations only). This option displays a page which gives information about when the sensor is next due a calibration.
O_2	**Oxygen sensor information** – (oxygen configurations only). This option displays a page which gives information about when the sensor is next due a calibration and when replacement of the sensor is due.

Copyright © 2020 Analox Ltd. All Rights Reserved.

Commercial in Confidence

6.9 Gas alarms

The ADM Aspida has a range of configurable alarms to warn the user of potentially dangerous atmospheres. For each gas sensor fitted to the device, up to 3 configurable alarms are available. In the case of carbon dioxide, an extra time weighted average (TWA) alarm is provided. See section 6.17 for more details.

In the case of an alarm condition being detected, the horn will activate giving an audible warning to the user. At the same time, the red alarm indicators will flash.

The device also has a vibrating alert to accompany gas alarms. When an alarm is triggered the unit will vibrate (vibration limited to 10 seconds when man-down detection is enabled). The unit will not vibrate whilst connected to USB or the charger.

A gas alarm condition will also be shown on the display, giving a clear indication of the gas that has triggered the alarm. In the case of an alarm, the gas warning symbol ⚠ will appear below the gas reading which will be surrounded by a flashing border, as shown below.

Figure 13 The main gas display showing that carbon dioxide levels have triggered an alarm

Each alarm is configurable as either high-going or low-going. In the case of a high going alarm, if the gas value exceeds the configurable set-point, the alarm will be activated. The 3 gas alarms are also ranked in order of priority, so that if a more dangerous level of gas is detected, the user is notified.

Example:
Two low going alarms are normally configured for detection of low oxygen levels.

- Priority 1 alarm is configured as a low going alarm with a set-point of 18.0% or 180mBar.
- Priority 2 alarm is configured as a low going alarm with a set-point of 19.5% or 195mBar.

If using this setup, the detected level of oxygen falls below 19.5%, priority 2 alarm will be activated. The red indicators, vibration and horn will all activate, pulsing at a moderate rate, and a visual warning will be given on screen. The oxygen value will be highlighted and the gas warning symbol ⚠ shown below the reading.

If the detected oxygen level falls further so that it is below 18.0%, priority 1 alarm will be activated. This alarm is of a higher priority than the priority 2 alarm so the urgency of the alarm will be increased. The indicators, vibration and horn will begin to pulse more rapidly to indicate that the severity of the alarm has increased.

There is also normally a priority 3 alarm is configured as a high going oxygen alarm with a set-point of 23.0% or 230mBar.

Copyright © 2020 Analox Ltd. All Rights Reserved.

Commercial in Confidence

6.10 Global alarm options

There are three configurable options which affect all of the ADM Aspida's alarms. Muting, latching and quiet options are set using the ADM Aspida configuration software. See the ADM Aspida configuration software manual for instructions.

6.11 Alarm set-points

The alarm set-points and direction can be changed using the ADM Aspida configuration software. See the ADM Aspida configuration software manual for instructions. An ADM Aspida also has the facility to change the alarm set-points on the device as per section 6.11.1

Copyright © 2020 Analox Ltd. All Rights Reserved.

Commercial in Confidence

6.11.1 On device alarm set-points

The below procedure is the same for both the CO_2 and O_2 alarm setpoints.

1] Press the button to access the device menu.

2] Use the button multiple times to highlight the Alm CO_2 icon or the Alm O_2 icon (initially off the display to the right) and press .

Figure 14 Alm CO_2 or Alm O_2 selection

3] Using the and . Buttons select the relevant Alm 1 , Alm 2 or Alm 3 icon and then use the and icons to adjust the displayed value to the required alarm value.

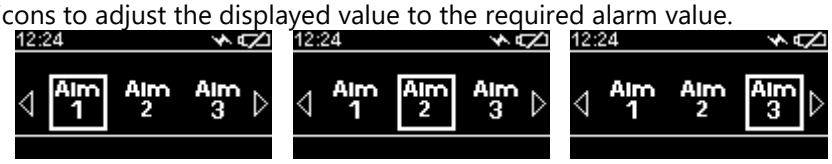

Figure 15 Selecting the alarm setpoint

4] When correctly set, confirm the alarm value using the icon and . Button.

Figure 16 Example CO_2 Alm 1 set-point

Figure 17 Example O_2 Alm 1 set-point

Copyright © 2020 Analox Ltd. All Rights Reserved.

Commercial in Confidence

6.12 Alarm latching

Sometimes it is useful for a user to be alerted to a harmful gas level, even after the level of gas has dropped to a safe level. The ADM Aspida can be configured to use latching alarms so that alarms triggered by harmful gas levels will not be missed. The latching alarms option can be enabled using the ADM Aspida configuration software.

If the device is configured to use latching alarms, then any alarm that is triggered will remain active until it is acknowledged by pressing the button.

Example

If a high-going alarm is activated by an increasing level of gas, the alarm will continue to sound even after the gas level has dropped below the alarm set-point. The alarm can be acknowledged by pressing the button when the gas reading has fallen below the set-point.

In the case of multiple alarms, the highest priority alarm that was triggered will be latched. If the priority 1 alarm is latched and the gas level drops below the priority 1 set-point, pressing the button will clear the priority 1 alarm, however, if the gas level is still sufficient to trigger the priority 2 alarm, the device will continue to alarm at a priority 2 level.

6.13 Alarm muting

Sometimes it is desirable to be able to mute the horn or stop the device vibrating when an alarm is triggered. The ADM Aspida provides an option to allow alarms to be muted. The mutable alarms option can be set using the ADM Aspida configuration software.

If the alarm muting option is set on the device, any active alarm can be silenced by pressing the button whilst in an alarm state. Pressing will deactivate the horn and the vibration. The red indicators and the on-screen warning will continue to flash until the alarm condition is cleared by safe levels of gas. In the case where a lower priority alarm has been muted and a higher priority alarm is triggered, the alarms will be un-muted.

Example

> If a priority 2 alarm is activated and muted and the detected gas level changes to activate a priority 1 alarm, the horn and vibration will re-activate to warn the user of the increased severity. A muted alarm will not be un-muted in the case where the alarm level drops to a lower priority.

6.14 Quiet alarms

Sometimes it is desirable to suppress the audible indication when alarm is triggered. The ADM Aspida provides an option to allow alarms to be silenced. The quiet alarms option can be set using the ADM Aspida configuration software. The display will indicate quiet mode with an icon in the status area.

Copyright © 2020 Analox Ltd. All Rights Reserved.

Commercial in Confidence

6.15 Data logging

The ADM Aspida has a built-in data-logging facility which will automatically log gas readings for all fitted sensors and pressure, whenever the device is active. Readings are logged to internal memory at a rate configurable through the user software. The device can store over 7 days of continuous data. All data is logged with a date and time stamp, and where multiple users are registered with the device, each set of readings is logged against the selected user ID.

The data-log can be downloaded from the device for analysis using the ADM Aspida configuration software. See the ADM Aspida configuration software manual for instructions.

6.16 Panic alarm

In cases where a worker is in distress and still conscious, it is possible to activate the ultra-loud siren manually. To activate the panic alarm, press and hold the button for a minimum of 1 second.

Copyright © 2020 Analox Ltd. All Rights Reserved.

Commercial in Confidence

6.17 Time-weighted average (TWA) monitoring of carbon dioxide

Carbon dioxide is toxic to the human body as concentrations increase. Short term exposure to the gas can be potentially lethal. Longer term exposure to more moderate levels of carbon dioxide can also be detrimental to health, so health and safety bodies such as UK HSE define occupational exposure levels (OEL) for the gas. These OELs provide a recommended safe exposure to carbon dioxide whilst under working conditions. The occupational exposure levels are based on a calculated time-weighted average (TWA) level of carbon dioxide in any one 24-hour period. The TWA calculation is based on average carbon dioxide levels weighted to an assumed standard 8-hour daily working shift.

The ADM Aspida has a facility which automatically calculates a TWA value on a per-user basis. When a user powers on the device and selects a user ID, the ADM Aspida begins calculating and continuously updating that user's own TWA. The device also considers any historic data from the last 24 hours which is relevant to the selected user. TWA data is logged alongside the actual gas readings in the internal data log.

NOTE: **IF NO USERS IDS ARE REGISTERED TO THE DEVICE, THE TWA VALUES WILL ALL BE ATTRIBUTED TO A DEFAULT USER.**

An alarm feature is provided which will warn of a high TWA exposure to carbon dioxide. In addition to the normal 3 available gas alarms per sensor, carbon dioxide sensors have a 4th alarm (priority 4) which is triggered when the calculated TWA value exceeds the TWA set-point. This alarm is set by default to the UK HSE recommended OEL for carbon dioxide of 5000ppm (0.5%). When this alarm is triggered, the red indicators, vibration and horn warnings will activate as with other gas alarms. In the case of a TWA alarm, a TWA symbol will be shown below the carbon dioxide reading on the display, as shown below. The TWA alarm is the lowest priority alarm and as such will be over-ridden by any gas alarms triggered by a short-term increase in carbon dioxide levels.

Figure 18 The main gas display showing that the user has exceeded their TWA exposure to carbon dioxide

As with the standard gas alarms, the TWA alarm can also be fully configured using the ADM Aspida configuration software.

Copyright © 2020 Analox Ltd. All Rights Reserved.

Commercial in Confidence

6.18 Maintenance reminders

The ADM Aspida can track the due dates for the various maintenance tasks that are required during the products life and will display a warning symbol on the display when a maintenance task is due. Reminders will be shown for the following tasks.

Sensor calibration due (carbon dioxide and oxygen sensors)
Sensor replacement due (oxygen sensors only)

The due dates for maintenance tasks (dd/mm/yyyy) can be viewed at any time by accessing the sensor information screen for each sensor by selecting either O_2 or CO_2 from the main menu. An example is shown in **Figure 19**.

Figure 19 Oxygen sensor information

6.19 Calibration reminders

When a sensor is due for a re-calibration, the calibration due reminder symbol (CAL) will be displayed flashing below the reading of the sensor that is due calibration, as shown in **Figure 20**. This symbol will continue to flash until a calibration has been performed.

Figure 20 Carbon dioxide calibration due reminder

In the case of an oxygen sensor, the calibration due reminder will be cleared upon a successful calibration. In the case of a carbon dioxide sensor, the reminder will only be cleared once a zero and span calibration have been performed consecutively. See the 'Calibration' section of this manual for details of how to calibrate the sensors.

Copyright © 2020 Analox Ltd. All Rights Reserved.

Commercial in Confidence

6.20 Sensor replacement reminders

Oxygen sensors will need to be periodically replaced as they deplete. When an oxygen sensor is due to be replaced, the replacement due reminder icon (⇆) will be displayed flashing below the sensor's gas reading, as shown in Figure 12. See section 7.5 for details of how to replace the oxygen sensor. The sensor replacement reminder can only be reset by using the ADM Aspida configuration software. See the ADM Aspida configuration software manual for details of how to reset the sensor replacement reminder.

Figure 21 Oxygen replacement due reminder

6.21 Faults

If at any point during operation the device detects a fault, an audible alarm will be sounded, and the amber indicator will flash. A fault will also be indicated by a 🔧 symbol on the display top bar. If the fault is related to a sensor, the sensor window will show '---' and the 🔧 symbol will be shown below the sensor's gas reading window, as shown below. A fault alarm can be acknowledged by pressing the button.

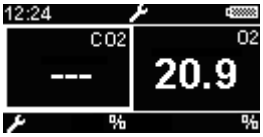

Figure 22 Display showing a carbon dioxide sensor fault

WARNING: IF AT ANY TIME THE GREEN 'OK' INDICATOR IS NOT FLASHING AND THE AMBER 'FAULT' INDICATOR IS FLASHING THE ADM ASPIDA MUST NOT BE USED AND THE SUPPLIER SHOULD BE CONTACTED.

Copyright © 2020 Analox Ltd. All Rights Reserved.

Commercial in Confidence

6.22 Troubleshooting

Symptom	Possible cause	Action
Device does not switch on	No batteries, or incorrectly orientated batteries	Check that batteries are inserted correctly
Device does not switch on	Batteries are flat	Check that the batteries are inserted correctly and are rechargeable NiMH then perform a device charge.
Batteries will not charge (shown flashing)	Batteries may not be rechargeable type	Check that the batteries fitted are the rechargeable NiMH batteries supplied with the ADM Aspida
Batteries will not charge (shown flashing)	Aged batteries causing a charge fault	Contact supplier for information about replacing rechargeable batteries
Batteries will not charge (shown)	No batteries fitted	Check that rechargeable batteries are fitted
Battery charge completes but battery life is short	Battery ageing reduced battery capacity	Contact supplier for information about replacing rechargeable batteries
Flashing CAL symbol underneath gas reading	The sensor is due a recalibration	Refer to section 0 of this manual for instructions
Flashing ⇆ symbol underneath oxygen gas reading	The oxygen sensor is due to be replaced	Refer to section 7.5 of this manual for instructions

Copyright © 2020 Analox Ltd. All Rights Reserved.

Commercial in Confidence

7 Maintenance

7.1 Spares & accessories

Part number	Description
9300-1008K	Aspida download kit, comprising: 1 x software disk 1 x USB lead
9300-1009K	Wall mount clip
9300-1010	Leather belt clip with press-stud fastener
2822-0035	9V Universal Charger/PSU (With UK, Euro & US Heads)
T3672EG	Australian Plug Head for Universal PSU
P0132-401	ADM Aspida mounting brackets (Optional – to replace ties and bases)
4000-0132-0001	ADM Aspida Faceplate Kit
P0132-602	ADM Aspida fixing kit comprising: 4 x M5 cage nuts 4 x M5x25mm Pozi Pan screws
P0132-603	ADM Aspida battery backup comprising: 2 x NiMH re-chargeable batteries
PGA-401DK	Dual calibration adaptor
PGA-401SK	Single calibration adaptor
CO_2 calibration gas kit, comprising:	
Contact Analox or source locally.	20l 3% CO_2 in N_2
Contact Analox or source locally.	20l 100% N_2
Contact Analox or source locally.	Fine control valve and tubing
O_2 calibration gas kit, comprising:	
Contact Analox or source locally.	20l 21% O_2 in N_2
Contact Analox or source locally.	20l 100% N_2
Contact Analox or source locally.	Fine control valve and tubing
9100-1060RK	Replacement O_2 sensor and extraction kit

Copyright © 2020 Analox Ltd. All Rights Reserved.

Commercial in Confidence

7.2 Calibration

The sensors within the ADM Aspida device should be calibrated periodically to compensate for the effect of aging. It is therefore important that the sensors are periodically re-calibrated.

The regularity of calibration depends upon the sensor.

- Carbon dioxide sensors should be calibrated every 12 months.
- Oxygen sensors should be calibrated every 3 months and when a new sensor is installed. Additionally, if the unit is dropped or accidentally immersed this can affect the oxygen sensor calibration so recalibration may be required. See section 0 below in case of accidental immersion.

Since charging the batteries causes the unit to heat up which in turn causes some variation in readings, it is inadvisable to calibrate the unit when actively charging the batteries or soon after.

7.3 Sensor calibration

The calibrations available on the ADM Aspida are shown in the table below. For a calibration due notification to be cleared for a sensor, the user must perform all of the calibrations available for the sensor. The ADM Aspida requires both a low and high oxygen calibration to be performed using calibration gas to clear a calibration due notification.

Aspida type	Carbon dioxide calibrations available on device	Oxygen calibrations available on device
ADM Aspida	High and low	High and low

WARNING: **ALWAYS ENSURE THAT THE CALIBRATION GAS IS SUITABLE FOR USE. INACCURACY IN CALIBRATION OF THE UNIT WILL CAUSE AN INACCURACY OF THE DISPLAYED AND ALARMED VALUES. CERTIFIED CALIBRATION GAS SHOULD ALWAYS BE USED WHEN CALIBRATING CO_2 SENSORS.**

Copyright © 2020 Analox Ltd. All Rights Reserved.

Commercial in Confidence

7.3.1 Perform an O_2 sensor calibration:

1] Press the button to access the device menu.

2] Use the button multiple times to highlight the CAL O_2 icon (initially off the display to the right) and press .

3] Using the and . Buttons and and icons, adjust the displayed value to the correct calibration value corresponding to the calibration gas used.

4] When correctly set, confirm the calibration using the icon and . button.

Figure 23 Calibration data entry screen (ready to confirm calibration)

5] The unit will now sample the ambient air for 30 seconds to detect a stable gas reading. The progress of the sampling will be displayed on screen as shown below.

Figure 24 Calibration progress

6] When the sampling process has complete, an audible alert will be given, and a calibration confirmation screen will be shown as below.

Figure 25 Calibration failed

Figure 26 Calibration passed

7] If the calibration passed, then the tick icon will be shown. The new calibration information will then be stored to the device memory and the device is ready for use. Press the button to confirm the operation and return to the main screen.

Copyright © 2020 Analox Ltd. All Rights Reserved.

Commercial in Confidence

8] If a stable oxygen reading cannot be detected, then the confirmation screen will show a cross icon. Press the button to acknowledge the failed calibration. A failed calibration will leave the previous gas calibration unchanged. To attempt the calibration again repeat steps 3 – 8.
9] Once calibrated successfully, the calibration due date for the sensor will be reset.

7.3.2 Perform a CO_2 sensor calibration

The below procedure is the same for both the CO2 LO and CO2 HI calibrations.

1] Press the button to access the device menu.
2] Use the button multiple times to highlight the CAL CO_2 icon (initially off the display to the right) and press .
3] Using the and . Buttons select the relevant CAL LO or CAL HI icon and then use the and icons to adjust the displayed value to the correct calibration value corresponding to the calibration gas used.
4] When correctly set, confirm the calibration using the icon and . button.

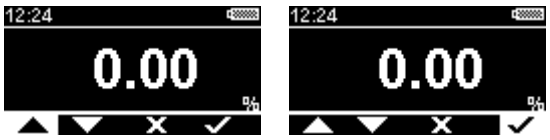

Figure 27 ***CO2 LO calibration data entry screen (ready to confirm calibration)***

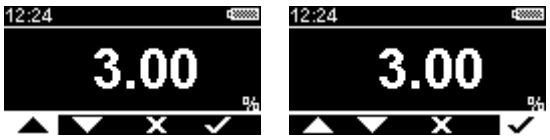

Figure 28 ***CO2 HI calibration data entry screen (ready to confirm calibration)***

5] The unit will now sample the ambient air for 30 seconds to detect a stable gas reading. The progress of the sampling will be displayed on screen as shown below.

Figure 29 ***Calibration progress***

Copyright © 2020 Analox Ltd. All Rights Reserved.

Commercial in Confidence

6] When the sampling process has complete, an audible alert will be given, and a calibration confirmation screen will be shown as below.

Figure 30 Calibration failed

Figure 31 Calibration passed

7] If the calibration passed, then the tick icon will be shown. The new calibration information will then be stored to the device memory and the device is ready for use. Press the button to confirm the operation and return to the main screen.

8] If a stable carbon dioxide reading cannot be detected, then the confirmation screen will show a cross icon. Press the button to acknowledge the failed calibration. A failed calibration will leave the previous gas calibration unchanged. To attempt the calibration again repeat steps 3 – 8.

Once calibrated successfully, the calibration due date for the sensor will be reset.

Copyright © 2020 Analox Ltd. All Rights Reserved.

Commercial in Confidence

7.4 CO_2 sensor replacement

CAUTION: **ANALOX IS THE ONLY COMPANY APPROVED TO SERVICE AND/OR REPLACE THE CO_2 SENSOR. ANY ATTEMPT TO SERVICE, REPAIR OR REPLACE THE CO_2 SENSOR BY ANY OTHER PARTY WILL VOID ANY WARRANTY.**

7.5 Oxygen sensor replacement

The oxygen sensor used in oxygen versions of the ADM Aspida is an electrochemical cell, and hence the sensor output will deplete over time, the expected life of the sensor is 1 year (with a 6-month warranty), depending on usage. After a 1-year period of service, or when the sensor has depleted, the oxygen sensor should be replaced with a fresh sensor. (Contact supplier for a replacement sensor).

WARNING: **BEFORE REPLACING THE SENSOR, ENSURE THE DEVICE IS SWITCHED OFF (DISCONNECT FROM ANY USB CABLE OR CHARGER). OPEN THE BATTERY COMPARTMENT AND REMOVE THE BATTERIES FROM THE DEVICE.**

WARNING: **THE SENSOR IN THE ADM ASPIDA IS AN ELECTROCHEMICAL DEVICE AND CONTAINS A CAUSTIC ELECTROLYTE. THE SENSORS ARE THEMSELVES SEALED AND DO NOT UNDER NORMAL CIRCUMSTANCES PRESENT A HEALTH HAZARD HOWEVER IF LEAKAGE OF THE POTASSIUM HYDROXIDE ELECTROLYTE HAS OCCURRED USE RUBBER GLOVES AND WEAR CHEMICAL SPLASH GOGGLES TO HANDLE AND CLEAN UP AND DO NOT ALLOW THE ELECTROLYTE ONTO ANY PART OF YOUR BODY OR CLOTHING. RINSE CONTAMINATED SURFACES WITH WATER. IN THE EVENT THAT YOU DO COME INTO CONTACT WITH THE ELECTROLYTE WASH THE CONTAMINATED PART WITH COPIOUS AMOUNTS OF WATER.**

For ADM Aspida's with the faceplate fitted section 4.3 should be followed to gain access to the instrument.

Copyright © 2020 Analox Ltd. All Rights Reserved.

Commercial in Confidence

To replace the oxygen sensor:

1] Remove the top 4 screws from the device using a cross-head screwdriver as shown in Figure **32**. Retain the screws along with the sealing washers.

Figure 32 Remove the sensor cap screws

2] Gently remove the sensor cap as shown in Figure **33**.

Figure 33 Remove the sensor cap

WARNING: DO NOT TOUCH THE INSIDE OF THE (INSTRUMENT OTHER THAN AS NOTED IN THESE INSTRUCTIONS) WITHOUT APPROPRIATE ANTI-STATIC PRECAUTIONS.

Copyright © 2020 Analox Ltd. All Rights Reserved.

Commercial in Confidence

3] Locate the alignment rib on the sensor extraction tool as shown in Figure 18.

Figure 34 Locate the alignment rib

4] Gently slide the sensor extraction tool over the oxygen sensor (right hand sensor) being careful not to cause damage to the carbon dioxide sensor (left hand sensor, if fitted). Ensure that the alignment rib on the extraction tool lines up with the alignment marker on the ADM Aspida case as shown in Figure **35**.

Figure 35 Align the extraction tool

Copyright © 2020 Analox Ltd. All Rights Reserved.

Commercial in Confidence

5] The extraction tool should now be positioned as shown in Figure **36**.

Figure 36 Correct extraction tool position

6] Squeeze the grip on the extraction tool to achieve a firm hold on the oxygen sensor as shown in Figure **37**.

Figure 37 Squeeze the extraction tool

Copyright © 2020 Analox Ltd. All Rights Reserved.

Commercial in Confidence

7] Lift the extraction tool vertically away from the device and the oxygen sensor should lift out of its socket as shown in Figure **38**.

Figure 38 Removing the oxygen sensor

8] Remove the old sensor from the extraction tool by gently pushing the sensor from the wide, top end of the extraction tool, whilst not squeezing the grip.

THE SENSOR CONTAINS LEAD AND ACCORDING TO WEEE REGULATION MUST NOT BE PLACED IN HOUSEHOLD WASTE BINS. PLEASE CHECK LOCAL REGULATIONS FOR INFORMATION ON THE DISPOSAL OF ELECTRONIC PRODUCTS IN YOUR AREA.

9] Remove the new sensor from its packaging. Oxygen sensors are supplied in sealed bags. Before the bag is opened check that the sensor has not leaked – if it has, then please refer to the safety information at the start of this section.

Figure 39 Insert the new sensor into the extraction tool

Copyright © 2020 Analox Ltd. All Rights Reserved.

Commercial in Confidence

10] Insert the new sensor as show in Figure **39**, ensuring that the two pins of the new sensor are away from, but align with the extraction tool alignment rib, as shown in Figure **40**.

Figure 40 Align the new sensor in the extraction tool

11] Align the extraction tool rib with the ADM Aspida case alignment mark as in step 4 as shown in Figure **41**.

Figure 41 Align the new sensor with the ADM Aspida device

Copyright © 2020 Analox Ltd. All Rights Reserved.

Commercial in Confidence

12] Push the tool and sensor gently downwards into the case until the sensor locates firmly within its socket.

13] Hold the top ring of the extraction tool gently, without squeezing the grip (Figure **42**) and lift the tool vertically upwards to remove the extraction tool whilst leaving the new sensor in place. (A gentle twisting of the tool may help to separate the tool from the sensor).

Figure 42 Remove the extraction tool

14] Replace the sensor cap ensuring that the oxygen cell is centrally sited in the gas port with the white gasket visible around the whole of the gas port. If misaligned, remove the sensor cap, and adjust the oxygen cell position using the extraction tool. Then refit the cap and recheck the alignment.

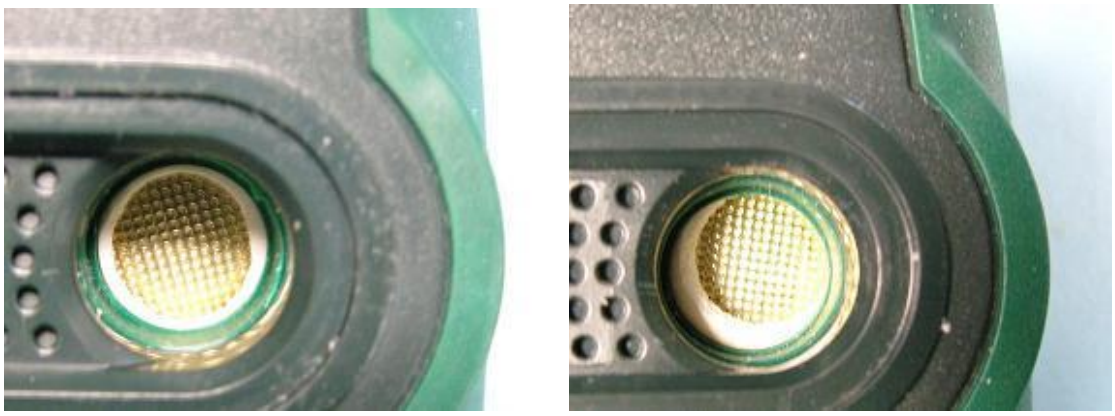

Figure 43 Centralised and misaligned sensors

Copyright © 2020 Analox Ltd. All Rights Reserved.

Commercial in Confidence

15] Holding the sensor cap in position, turn the unit over and fit the 4 crosshead screws (including washers) into the rear of the case as shown in. Figure 28.

Figure 44 ***Replace the sensor cap and secure the screws***

WARNING: **ANY NEW SENSOR FITTED TO A DEVICE WILL TAKE TIME TO SETTLE TO A STABLE READING. FOR THIS REASON, ONCE THE SENSOR HAS BEEN FITTED, THE DEVICE SHOULD BE LEFT UN-POWERED FOR AT LEAST 2 HOURS BEFORE ATTEMPTING TO POWER-UP AND CALIBRATE.**

16] Once the sensor has been allowed to settle, replace the batteries and fit the battery cover.

17] Power the device and allow the sensor(s) to warm up. The new oxygen sensor will require calibration and may be showing a fault due to an over-range reading (this is possible for a new sensor). To calibrate the oxygen sensor, follow the instructions in the section 0.

NOTE: **THE OXYGEN SENSOR MAY REQUIRE FURTHER FRESH AIR CALIBRATIONS AS THE SENSOR CONTINUES TO SETTLE. THE OXYGEN READING SHOULD BE CHECKED FREQUENTLY IN FRESH AIR DURING THE FIRST FEW HOURS OF OPERATION WITH A NEW OXYGEN SENSOR.**

To ensure the sensor replacement reminder (⇆ icon) occurs at the correct time for the new sensor, the reminder should be reset using the ADM Aspida configuration software. See the ADM Aspida software configuration manual for instructions.

Copyright © 2020 Analox Ltd. All Rights Reserved.

Commercial in Confidence

7.6 Cleaning

The ADM Aspida units should be cleaned using a damp cloth only. Abrasive or solvent products should not be used.

The only exception to this is if the unit has been accidentally immersed in dirty or salt water. In this situation only, the gas sensing ports should be rinsed with a gentle flow of clean water before leaving the unit to dry, to ensure the pores of the membranes over the sensors are not blocked by dirt or salt. The unit should be turned off after accidental immersion and not turned on again until it has completely dried. After accidental immersion (and rinsing if necessary), excess water should be shaken from the unit then the unit must be allowed to air-dry completely before using.

This may take a few hours in cool or damp conditions, during which time unit should be left turned off. If the unit is turned on whilst the membrane is damp, the reading will be low (due to excess water vapour) often enough to cause an alarm and will also drift as the water evaporates. If the unit is recalibrated whilst the membrane is still damp, this drift will continue so invalidating the calibration. For this reason, after accidental immersion the unit should be left in a dry environment to completely dry before subsequent use.

Copyright © 2020 Analox Ltd. All Rights Reserved.

Commercial in Confidence

8 Specifications

System specification	
Operating temperature	0 to 50°C
Operating pressure	Atmospheric pressure
Humidity range	0 to 99 % RH
Display	High-visibility, Organic Light Emitting Diode (OLED) display
Alarm horn	95dB @ 30cm (110dB – man-down alarm)
LED indicators	1 x Green – OK 1 x Amber – Fault 3 x Red – Alarm
Internal data log	1 log every 30 seconds for at least 7 days of continuous use
Batteries	2 x NiMH 2100mAh AA batteries (Or suitable AA type batteries)
Battery discharge time	12 hours under normal operation (passive atmospheric monitoring, minimal user interaction, no alarms)
Battery lifespan	2 years
Battery charge time	4.5 hours (from flat)
Charger power supply rating	9v DC to 0.55A DC jack 5.5x12.0x2.1mm centre +ve
Calibration adapter max flow	0.5 l/min
EMC performance	Portable unit fully satisfies MIL STD 461F Charger compliant @ 14cm for emissions RE101 2004/108/EC

Carbon dioxide sensor (where fitted)	
Sensor type	Analox infra-red MIR
Range	0.01 to 50.00 mbar ppCO_2 (0.01 to 5.00% at 1000mbara)
Response time	T90 < 60 seconds
Sensor life span	5 years
Accuracy (at standard temperature and pressure):	±(1% of full scale+ 2% of reading)

Copyright © 2020 Analox Ltd. All Rights Reserved.

Commercial in Confidence

Oxygen sensor (where fitted)	
Sensor type	Electrochemical
Range	0.1 to 2000.0 mbar ppO_2 (0.1 to 100.0% O_2 at 1000mbara)
Response time	T90 < 30 seconds
Sensor life span	1 year (expected)
Accuracy (at standard temperature and pressure):	±1% of full scale

Copyright © 2020 Analox Ltd. All Rights Reserved.

Commercial in Confidence

9 Warranty information

We provide the following Warranties for the ADM Aspida and associated accessories

A 2-year electronics warranty.
A 6-month oxygen sensor warranty.
A 5-year carbon dioxide sensor warranty

In all cases the warranty period runs from the date of our invoice.

We warrant that the equipment will be free from defects in workmanship and materials.

The warranty does not extend to and we will not be liable for defects caused by the effects of normal wear and tear, erosion, corrosion, fire, explosion, misuse, use in any context or application for which the equipment is not designed or recommended, or unauthorised modification.

Following a valid warranty claim in accordance with the above, the equipment, upon return to us, would be repaired or replaced without cost or charge but in our discretion we may elect instead to provide to you whichever is the lesser of the cost of replacement or a refund of net purchase price paid as per our Invoice on initial purchase from us. We shall have no liability for losses, damages, costs or delays whatsoever. We shall have no liability for any incidental or consequential losses or damages. All express or implied warranties as to satisfactory or merchantable quality, fitness for a particular or general purpose or otherwise are excluded and no such Warranties are made or provided, save as set out in this clause.

To effectively notify a warranty claim, the claim with all relevant information and documentation should be sent in writing to:

Analox Ltd
15 Ellerbeck Court
Stokesley Business Park
Stokesley
North Yorkshire
TS9 5PT

Or by e-mail to: info@analox.net
Or by Fax to: +44 1642 713900

We reserve the right to require from you proof of dispatch to us of the notification of warranty claim by any of the above alternative means.

The equipment should not be sent to us without our prior written authority. All shipping and Insurance costs of returned equipment are to be borne by you and at your risk. All returned items must be properly and sufficiently packed.

Copyright © 2020 Analox Ltd. All Rights Reserved.

Commercial in Confidence

10 Disposal

10.1 WEEE statement

According to WEEE regulation this electronic product cannot be placed in household, waste bins. Please check local regulations for information on the disposal of electronic products in your area.

10.2 Oxygen sensor disposal

The oxygen sensor used contains toxic compounds irrespective of physical condition. It should be disposed of according to local waste management requirements and environmental legislation. It should not be burnt since it may evolve toxic fumes.

Copyright © 2020 Analox Ltd. All Rights Reserved.

Commercial in Confidence

11 UK Declaration of Conformity

UK Declaration of Conformity

Declaration number: PSA-C003-03

Manufacturer's name: Analox Limited

Manufacturer's address: 15 Ellerbeck Court
Stokesley Business Park
Stokesley
North Yorkshire
TS9 5PT

It is declared that the following product:

Product name: Sub Aspida
ADM Aspida

Product code: SAxxxxxxxxxx
ADMxxxxxxxxxx

Conforms to all applicable requirements of: BS EN 50270:2015 (Type 1)
BS EN 61000-6-1:2007
BS EN 61000-6-3:2007+A1:2011
BS EN/IEC 61010-1:2010
BS EN 60529 IP6X

For SACCAAAX02A:
Partial (DRE01.B & DCS10.B) compliance to Defence Standard 59-411 Part 3 Issue 3:2019

- Complies with the Electromagnetic Compatibility Regulations 2016
- The Electrical Equipment (Safety) Regulations 2016
- Complies with the requirements of UK RoHS Directive 2015/863
- Complies with the requirements of WEEE Regulations 2013

The above product is UKCA-marked and satisfies the relevant legislative requirements of the UK

Signed on behalf of: Analox Limited

Date: 23rd July 2024

Signed:

Name: Paul Branton
Position: Technical Director

Copyright © 2020 Analox Ltd. All Rights Reserved.

Commercial in Confidence

12 Declaration of conformity

Declaration of conformity

Declaration number:	PSA-903-04
Manufacturer's name:	Analox Limited
Manufacturer's address:	15 Ellerbeck Court Stokesley Business Park Stokesley North Yorkshire TS9 5PT
It is declared that the following product:	
Product name:	Sub Aspida ADM Aspida
Product code:	SAxxxxxxxxxx ADMxxxxxxxxxx
Conforms to all applicable requirements of:	BS EN 50270:2015 (Type 1) BS EN 61000-6-1:2007 BS EN 61000-6-3:2007+A1:2011 IEC/EN 61010-1:2010 BS EN 60529 IP6X ANSI C63.4:2003 AS/NZS CISPR 22:2006 MIL STD 461F For SACCAAAX02A: Partial (DRE01.B & DCS10.B) compliance to Defence Standard 59-411 Part 3 Issue 3:2019

- Complies with the requirements of the EMC Directive 2014/30/EU
- Complies with the requirements of the Low Voltage Directive 2014/35/EU, as amended
- Complies with the requirements of the RoHS Directive 2015/863
- Complies with the requirements of the WEEE Directive 2012/19/EU

CE	The above product is CE-marked and satisfies the relevant legislative requirements of the European Economic Area (EEA)	CE
FCC	The above product is approved by FCC to class B levels according to title 47 of the Code of Federal Regulations (CFR) part 15 (47CFR15):2008	FC
C-Tick	The above product is C Tick compliant for sale in Australia and New Zealand	

Signed on behalf of:	Analox Limited
Date:	23rd July 2024
Signed:	
Name:	Paul Branton
Position:	Technical Director

Copyright © 2020 Analox Ltd. All Rights Reserved.

Commercial in Confidence